SAVE-IT

SAfety VEhicles using adaptive Interface Technology (Task 10)

Technology Review

Prepared by:

Gregory K. Scharenbroch
Delphi Electronics & Safety Systems
Phone: (765)-451-9469
Email: gregory.k.scharenbroch@delphi.com

January 2005

Table of Contents

Table of Contents 2
10.0 Program Overview 3
10.1 Introduction 11
10.2 Internal Sensor Review 13
10.2.1 Eye Tracking Systems (ETS) 13
10.2.1.1 Eye Tracking System Requirements 14
10.2.1.2 Eye Tracking System Techniques 16
10.3. Exterior Sensor Review 18
10.3.1 RADAR Types 21
10.3.1.1 Scanned FMCW 21
10.3.1.2 Switched Beam Pulse Doppler 21
10.3.1.3 Switched Beam FMCW 21
10.3.1.4 Simultaneous Beam FMCW 22
10.3.1.5 Monopulse-FSK 22
10.3.2 RADAR Types Comparison 22
10.3.2.1 Stationary Object Detection 22
10.3.2.2 Moving Object Detection 23
10.3.2.3 Installation/Service 23
10.3.2.4 Mounting Flexibility 24
10.3.2.5 Material Cost 24
10.3.3 LIDAR Types 25
10.3.3.1 Range finders 25
10.3.3.2 DIAL 25
10.3.3.3 Doppler 25
10.3.4 LIDAR Characteristics 25
10.3.4.1 RADAR/LIDAR Kinematics Comparison 26
10.3.4.2 RADAR/LIDAR Conclusion 27
10.3.5 Vision 27
10.4 Concept Vehicle Architecture 29
10.4.1 System Functional Description 29
10.5 Summary and Conclusion 36
10.6 References 37
10.7 Acronyms Glossary 39

10.0 Program Overview

Driver distraction is a major contributing factor to automobile crashes. National Highway Traffic Safety Administration (NHTSA) has estimated that approximately 25% of crashes are attributed to driver distraction and inattention (Wang, Knipling, & Goodman, 1996). The issue of driver distraction may become worse in the next few years because more electronic devices (e.g., cell phones, navigation systems, wireless Internet and email devices) are brought into vehicles that can potentially create more distraction. In response to this situation, the John A. Volpe National Transportation Systems Center (VNTSC), in support of NHTSA's Office of Vehicle Safety Research, awarded a contract to Delphi Electronics & Safety to develop, demonstrate, and evaluate the potential safety benefits of adaptive interface technologies that manage the information from various in-vehicle systems based on real-time monitoring of the roadway conditions and the driver's capabilities. The contract, known as SAfety VEhicle(s) using adaptive Interface Technology (SAVE-IT), is designed to mitigate distraction with effective countermeasures and enhance the effectiveness of safety warning systems.

The SAVE-IT program serves several important objectives. Perhaps the most important objective is demonstrating a viable proof of concept that is capable of reducing distraction-related crashes and enhancing the effectiveness of safety warning systems. Program success is dependent on integrated closed-loop principles that, not only include sophisticated telematics, mobile office, entertainment and safety warning systems, but also incorporate the state of the driver. This revolutionary closed-loop vehicle environment will be achieved by measuring the driver’s state, assessing the situational threat, prioritizing information presentation, providing adaptive countermeasures to minimize distraction, and optimizing advanced collision warning.

To achieve the objective, Delphi Electronics & Safety has assembled a comprehensive team including researchers and engineers from the University of Iowa, University of Michigan Transportation Research Institute (UMTRI), General Motors, Ford Motor Company, and Seeing Machines, Inc. The SAVE-IT program is divided into two phases shown in Figure i. Phase I spans one year (March 2003--March 2004) and consists of nine human factors tasks (Tasks 1-9) and one technology development task (Task 10) for determination of diagnostic measures of driver distraction and workload, architecture concept development, technology development, and Phase II planning. Each of the Phase I tasks is further divided into two sub-tasks. In the first sub-tasks (Tasks 1, 2A-10A), the literature is reviewed, major findings are summarized, and research needs are identified. In the second sub-tasks (Tasks 1, 2B-10B), experiments will be performed and data will be analyzed to identify diagnostic measures of distraction and workload and determine effective and driver-friendly countermeasures. Phase II will span approximately two years (October 2004--October 2006) and consist of a continuation of seven Phase I tasks (Tasks 2C--8C) and five additional tasks (Tasks 11-15) for algorithm and guideline development, data fusion, integrated countermeasure development, vehicle demonstration, and evaluation of benefits.

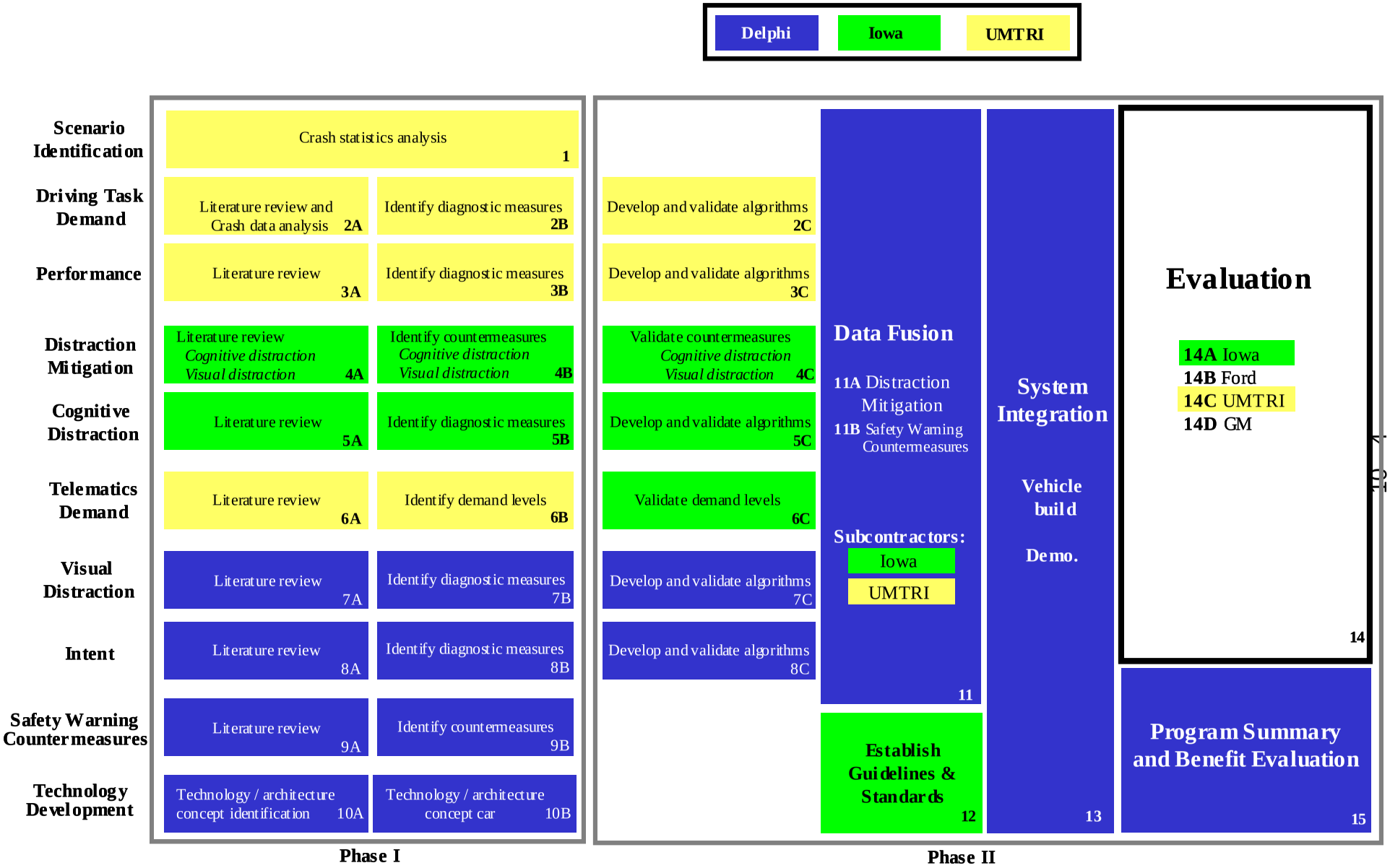

Figure i: SAVE-IT tasks

It is worthwhile to note the SAVE-IT tasks in Figure i are inter-related. They have been chosen to provide necessary human factors data for a two-pronged approach to address the driver distraction and adaptive safety warning countermeasure problems. The first prong (Safety Warning Countermeasures sub-system) uses driver distraction, intent, and driving task demand information to adaptively adjust safety warning systems such as forward collision warning (FCW) systems in order to enhance system effectiveness and user acceptance. Task 1 is designed to determine which safety warning system(s) should be deployed in the SAVE-IT system. Safety warning systems will require the use of warnings about immediate traffic threats without an annoying rate of false alarms and nuisance alerts. Both false alarms and nuisance alerts will be reduced by system intelligence that integrates driver state, intent, and driving task demand information that is obtained from Tasks 2 (Driving Task Demand), 3 (Performance), 5 (Cognitive Distraction), 7 (Visual Distraction), and 8 (Intent).

The safety warning system will adapt to the needs of the driver. When a driver is cognitively and visually attending to the lead vehicle, for example, the warning thresholds can be altered to delay the onset of the FCW alarm or reduce the intrusiveness of the alerting stimuli. When a driver intends to pass a slow-moving lead vehicle and the passing lane is open, the auditory stimulus might be suppressed in order to reduce the alert annoyance of a FCW system. Decreasing the number of false positives may reduce the tendency for drivers to disregard safety system warnings. Task 9 (Safety Warning Countermeasures) will investigate how driver state and intent information can be used to adapt safety warning systems to enhance their effectiveness and user acceptance. Tasks 10 (Technology Development), 11 (Data Fusion), 12 (Establish Guidelines and Standards), 13 (System Integration), 14 (Evaluation), and 15 (Program Summary and Benefit Evaluation) will incorporate the research results gleaned from the other tasks to demonstrate the concept of adaptive safety warning systems and evaluate and document the effectiveness, user acceptance, driver understandability, and benefits and weaknesses of the adaptive systems. It should be pointed out that the SAVE-IT system is a relatively early step in bringing the driver into the loop and therefore, system weaknesses will be evaluated, in addition to the observed benefits.

The second prong of the SAVE-IT program (Distraction Mitigation sub-system) will develop adaptive interface technologies to minimize driver distraction to mitigate against a global increase in risk due to inadequate attention allocation to the driving task. Two examples of the distraction mitigation system include the delivery of a gentle warning and the lockout of certain telematics functions when the driver is more distracted than what the current driving environment allows. A major focus of the SAVE-IT program is the comparison of various mitigation methods in terms of their effectiveness, driver understandability, and user acceptance. It is important that the mitigation system does not introduce additional distraction or driver frustration. Because the lockout method has been shown to be problematic in the aviation domain and will likely cause similar problems for drivers, it should be carefully studied before implementation. If this method is not shown to be beneficial, it will not be implemented.

The distraction mitigation system will process the environmental demand (Task 2: Driving Task Demand), the level of driver distraction [Tasks 3 (Performance), 5 (Cognitive Distraction), 7 (Visual Distraction)], the intent of the driver (Task 8: Intent), and the telematics distraction potential (Task 6: Telematics Demand) to determine which functions should be advised against under a particular circumstance. Non-driving task information and functions will be prioritized based on how crucial the information is at a specific time relative to the level of driving task demand. Task 4 will investigate distraction mitigation strategies and methods that are very well accepted by the users (i.e., with a high level of user acceptance) and understandable to the drivers. Tasks 10 (Technology Development), 11 (Data Fusion), 12 (Establish Guidelines and Standards), 13 (System Integration), 14 (Evaluation), and 15 (Program Summary and Benefit Evaluation) will incorporate the research results gleaned from the other tasks to demonstrate the concept of using adaptive interface technologies in distraction mitigation and evaluate and document the effectiveness, driver understandability, user acceptance, and benefits and potential weaknesses of these technologies.

In particular, driving task demand and driver state (including driver distraction and impairment) form the major dimensions of a driver safety system. It has been argued that crashes are frequently caused by drivers paying insufficient attention when an unexpected event occurs, requiring a novel (non-automatic) response. As displayed in Figure ii, attention to the driving task may be depleted by driver impairment (due to drowsiness, substance use, or a low level of arousal) leading to diminished attentional resources, or allocation to non-driving tasks[1]. Because NHTSA is currently sponsoring other impairment-related studies, the assessment of driver impairment is not included in the SAVE-IT program at the present time. One assumption is that safe driving requires that attention be commensurate with the driving demand or unpredictability of the environment. Low demand situations (e.g., straight country road with no traffic at daytime) may require less attention because the driver can usually predict what will happen in the next few seconds while the driver is attending elsewhere. Conversely, high demand (e.g., multi-lane winding road with erratic traffic) situations may require more attention because during any time attention is diverted away, there is a high probability that a novel response may be required. It is likely that most intuitively drivers take the driving-task demand into account when deciding whether or not to engage in a non-driving task. Although this assumption is likely to be valid in a general sense, a counter argument is that problems may also arise when the situation appears to be relatively benign and drivers overestimate the predictability of the environment. Driving

[1] The distinction between driving and non-driving tasks may become blurred sometimes. For example, reading street signs and numbers is necessary for determining the correct course of driving, but may momentarily divert visual attention away from the forward road and degrade a driver's responses to unpredictable danger evolving in the driving path. In the SAVE-IT program, any off-road glances, including those for reading street signs, will be assessed in terms of visual distraction and the information about distraction will be fed into adaptive safety warning countermeasures and distraction mitigation sub-systems.

environments that appear to be predictable may therefore leave drivers less prepared to respond when an unexpected threat does arise.

A safety system that mitigates the use of in-vehicle information and entertainment system (telematics) must balance both attention allocated to the driving task that will be assessed in Tasks 3 (Performance), 5 (Cognitive Distraction), and 7 (Visual Distraction) and attention demanded by the environment that will be assessed in Task 2 (Driving Task Demand). The goal of the distraction mitigation system should be to keep the level of attention allocated to the driving task above the attentional requirements demanded by the current driving environment. For example, as shown in Figure ii, “routine” driving may suffice during low or moderate driving task demand, slightly distracted driving may be adequate during low driving task demand, but high driving task demand requires attentive driving.

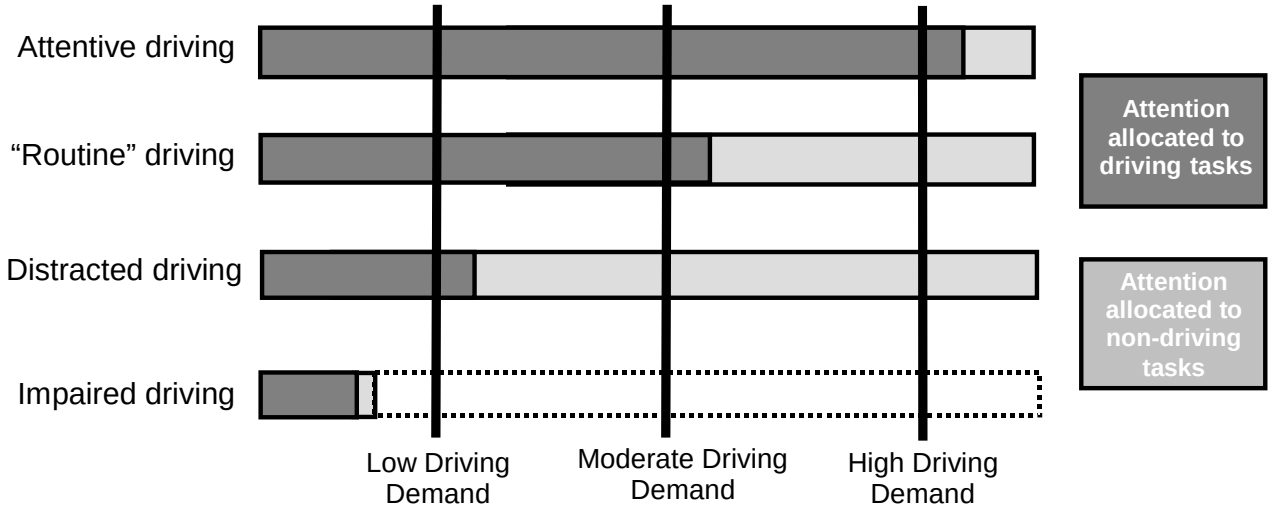

Figure ii. Attention allocation to driving and non-driving tasks

It is important to note that the SAVE-IT system addresses both high-demand and low-demand situations. With respect to the first prong (Safety Warning Countermeasures sub-system), the safety warning systems (e.g., the FCW system) will always be active, regardless of the demand. Sensors will always be assessing the driving environment and driver state. If traffic threats are detected, warnings will be issued that are commensurate with the real time attentiveness of the driver, even under low-demand situations. With respect to the second prong (Distraction Mitigation sub-system), driver state including driver distraction and intent will be continuously assessed under all circumstances. Warnings may be issued and telematics functions may be screened out under both high-demand and low-demand situations, although the threshold for distraction mitigation may be different for these situations.

It should be pointed out that drivers tend to adapt their driving, including distraction behavior and maintenance of speed and headway, based on driving (e.g., traffic and weather) and non-driving conditions (e.g., availability of telematics services), either consciously or unconsciously. For example, drivers may shed non-driving tasks (e.g., ending a cell phone conversation) when driving under unfavorable traffic and weather conditions. It is critical to understand this "driver adaptation" phenomenon. In principle, the "system adaptation" in the SAVE-IT program (i.e., adaptive safety warning countermeasures and adaptive distraction mitigation sub-systems) should be carefully implemented to ensure a fit between the two types of adaptation: "system adaptation" and "driver adaptation". One potential problem in a system that is inappropriately implemented is that the system and the driver may be reacting to each other in an unstable manner. If the system adaptation is on a shorter time scale than the driver adaptation, the driver may become confused and frustrated. Therefore, it is important to take the time scale into account. System adaptation should fit the driver's mental model in order to ensure driver understandability and user acceptance. Because of individual difference, it may also be important to tailor the system to individual drivers in order to maximize driver understandability and user acceptance. Due to resource constraints, however, a nominal driver model will be adopted in the initial SAVE-IT system. Driver profiling, machine learning of driver behavior, individual difference-based system tailoring may be investigated in future research programs.

Communication and Commonalities Among Tasks and Sites

In the SAVE-IT program, a "divide-and-conquer" approach has been taken. The program is first divided into different tasks so that a particular research question can be studied in a particular task. The research findings from the various tasks are then brought together to enable us to develop and evaluate integrated systems. Therefore, a sensible balance of commonality and diversity is crucial to the program success. Diversity is reflected by the fact that every task is designed to address a unique question to achieve a particular objective. As a matter of fact, no tasks are redundant or unnecessary. Diversity is clearly demonstrated in the respective task reports. Also documented in the task reports is the creativity of different task owners in attacking different research problems.

Task commonality is very important to the integration of the research results from the various tasks into a coherent system and is reflected in terms of the common methods across the various tasks. Because of the large number of tasks (a total of 15 tasks depicted in Figure i) and the participation of multiple sites (Delphi Electronics & Safety, University of Iowa, UMTRI, Ford Motor Company, and General Motors), close coordination and commonality among the tasks and sites are key to program success. Coordination mechanisms, task and site commonalities have been built into the program and are reinforced with the bi-weekly teleconference meetings and regular email and telephone communications. It should be pointed out that little time was wasted in meetings. Indeed, some bi-weekly meetings were brief when decisions can be made quickly, or canceled when issues can be resolved before the meetings. The level of coordination and commonality among multiple sites and tasks is un-precedented

and has greatly contributed to program success. A selection of commonalities is described below.

Commonalities Among Driving Simulators and Eye Tracking Systems In Phase I
Although the Phase I tasks are performed at three sites (Delphi Electronics & Safety, University of Iowa, and UMTRI), the same driving simulator software, Drive Safety™ (formerly called GlobalSim™) from Drive Safety Inc., and the same eye tracking system, FaceLab™ from Seeing Machines, Inc. are used in Phase I tasks at all sites. The performance variables (e.g., steering angle, lane position, headway) and eye gaze measures (e.g., gaze coordinate) are defined in the same manner across tasks.

Common Dependent Variables An important activity of the driving task is tactical maneuvering such as speed and lane choice, navigation, and hazard monitoring. A key component of tactical maneuvering is responding to unpredictable and probabilistic events (e.g., lead vehicle braking, vehicles cutting in front) in a timely fashion. Timely responses are critical for collision avoidance. If a driver is distracted, attention is diverted from tactical maneuvering and vehicle control, and consequently, reaction time (RT) to probabilistic events increases. Because of the tight coupling between reaction time and attention allocation, RT is a useful metric for operationally defining the concept of driver distraction. Furthermore, brake RT can be readily measured in a driving simulator and is widely used as input to algorithms, such as the forward collision warning algorithm (Task 9: Safety Warning Countermeasures). In other words, RT is directly related to driver safety. Because of these reasons, RT to probabilistic events is chosen as a primary, “ground-truth” dependent variable in Tasks 2 (Driving Task Demand), 5 (Cognitive Distraction), 6 (Telematics Demand), 7 (Visual Distraction), and 9 (Safety Warning Countermeasures).

Because RT may not account for all of the variance in driver behavior, other measures such as steering entropy (Boer, 2001), headway, lane position and variance (e.g., standard deviation of lane position or SDLP), lane departures, and eye glance behavior (e.g., glance duration and frequency) are also be considered. Together these measures will provide a comprehensive picture about driver distraction, demand, and workload.

Common Driving Scenarios For the tasks that measure the brake RT, the "lead vehicle following" scenario is used. Because human factors and psychological research has indicated that RT may be influenced by many factors (e.g., headway), care has been taken to ensure a certain level of uniformity across different tasks. For instance, a common lead vehicle (a white passenger car) was used. The lead vehicle may brake infrequently (no more than 1 braking per minute) and at an unpredictable moment. The vehicle braking was non-imminent in all experiments (e.g., a low value of deceleration), except in Task 9 (Safety Warning Countermeasures) that requires an imminent braking. In addition, the lead vehicle speed and the time headway between the lead vehicle and the host vehicle are commonized across tasks to a large extent.

Subject Demographics It has been shown in the past that driver ages influence driving performance, user acceptance, and driver understandability. Because the age

effect is not the focus of the SAVE-IT program, it is not possible to include all driver ages in every task with the budgetary and resource constraints. Rather than using different subject ages in different tasks, however, driver ages are commonized across tasks. Three age groups are defined: younger group (18-25 years old), middle group (35-55 years old), and older group (65-75 years old). Because not all age groups can be used in all tasks, one age group (the middle group) is chosen as the common age group that is used in every task. One reason for this choice is that drivers of 35-55 years old are the likely initial buyers and users of vehicles with advanced technologies such as the SAVE-IT systems. Although the age effect is not the focus of the program, it is examined in some tasks. In those tasks, multiple age groups were used.

The number of subjects per condition per task is based on the particular experimental design and condition, the effect size shown in the literature, and resource constraints. In order to ensure a reasonable level of uniformity across tasks and confidence in the research results, a minimum of eight subjects is used for each and every condition. The typical number of subjects is considerably larger than the minimum, frequently between 10-20.

Other Commonalities In addition to the commonalities across all tasks and all sites, there are additional common features between two or three tasks. For example, the simulator roadway environment and scripting events (e.g., the TCL scripts used in the driving simulator for the headway control and braking event onset) may be shared between experiments, the same distraction (non-driving) tasks may be used in different experiments, and the same research methods and models (e.g., Hidden Markov Model) may be deployed in various tasks. These commonalities afford the consistency among the tasks that is needed to develop and demonstrate a coherent SAVE-IT system.

The Content and Structure of the Report

The report submitted herein is a final report for Task 10 that documents the research progress to date (March 2003-March 2004) in Phase I. In this report, previous experiments are discussed, research findings are reported, and research needs are identified. This literature review report also serves to establish the research strategies of each task.

10.1 Introduction

The objective of this task is to evaluate the available technology, develop the architecture and sensors, and incorporate the viable research results gleaned from the other dimensions.

Available technologies in the areas of head and eye tracking technology, heart rate monitoring, target monitoring, and respiration monitoring detection have been considered. (Folke et al, 2003) As such, using these sensors to provide a reliable metric or indication of the driving task, an event, condition, or hazard is important. The Literature Reviews from Tasks 1 through 9 of the SAVE-IT program have provided the direction and justification for focus in the respective areas of technology.

An important activity of the driving task is tactical maneuvering such as speed and lane choice, navigation, and hazard monitoring. Zhang and Smith (2004) described a key component of tactical maneuvering is responding to unpredictable and probabilistic events (e.g., lead vehicle braking, vehicles cutting in front) in a timely fashion. Timely responses are critical for collision avoidance. If a driver is distracted, attention is diverted from tactical maneuvering and vehicle control, and consequently, reaction time (RT) to probabilistic events increases. Because of the tight coupling between reaction time and attention allocation, RT is a useful metric for operationally defining the concept of driver distraction. Furthermore, brake RT can be readily measured and is widely used as input to algorithms, such as the forward collision warning algorithm (Task 9: Safety Warning Countermeasures). Therefore, RT to probabilistic events is chosen as a primary, “ground-truth” dependent variable in Tasks 2 (Driving Task Demand), 5 (Cognitive Distraction), 6 (Telematics Demand), 7 (Visual Distraction), and 9 (Safety Warning Countermeasures). Because RT may not account for all of the variance in driver behavior, other measures such as steering entropy, headway, lane position and variance (e.g., standard deviation of lane position or SDLP), and eye glance behavior (e.g., glance duration and frequency) will also be considered.

Particular attention must be paid to several key factors when considering technologies for an automotive environment. First, and foremost, is price. Although the development and eventual introduction of new technologies in an automotive platform is very expensive, a clear path to a low cost solution must be evident.

Next, the feasibility of high volume manufacturing must be considered. Typical volumes in an automotive production program may reach millions of units per year. A technology that cannot be produced and/or duplicated in high volume may not be appealing to original equipment manufacturers (OEMs) or end customers (you and I). The concept of producing a product or component in high volume goes hand in hand with the first requirement of low cost. (NHTSA, 2000. *Automotive Collision Avoidance System Field Operational Test Program.* First Annual Report.) As these products or components become mass-produced, the inherent cost benefit is realized.

Additionally, the ability of a product, component, or technology to survive the harsh automotive environments is a critical consideration. A wide range of temperature extremes,

vibration, reliability over lifetime, exposure to elements, dirt, dust, moisture, and handling are just a few of the elements technologies being considered for an automotive application must withstand.

Ahead of the potential constraints mentioned above, any technology being considered for automotive applications must have a well-defined set of requirements matched and optimized to a set of specifications for that technology. In many cases, it may be necessary for a technology to have flexibility and scalability. In other words, a technology may be targeted for a particular application during its automotive introduction. However, in subsequent model years, it may be necessary for the technology to be used for other applications. Over time, OEMs and customers demand higher performance and more features of their products. If improved performance and an increased feature set is not possible, a reduction in cost is expected. For example, within the constraints mentioned above, the use of RADAR in adaptive cruise control (ACC) applications is feasible automotive solution. In follow-on models, the use of ACC RADAR data will expand to include new applications such as forward collision warning (FCW), headway alert, or precrash sensing (PCS).

Another example of this cost/performance pressure is in the area of driver monitoring. There are a variety of sensors available to collect a multitude of driver metrics and data. An emerging technology in the area of driver monitoring is vision-based image processing. Understanding and knowing what a driver is doing at all times while driving has always been the ultimate goal of human machine interface (HMI) researchers. Sensors used to monitor driver behavior could conceptually be used to detect drowsiness, inattention, impairment, position, posture, or intent. The challenge is, of course, to determine which available metric provided by the sensor can be used to accurately and quickly deliver data for algorithms to make decisions regarding the state, health, or actions of the driver. A technology roadmap is necessary to identify which technology to develop. In cases where multiple applications for a single technology is required, an effective and efficient architecture to support near, mid, and far term targets must be developed. A scalable, flexible architecture to support such development has been utilized for this project.

10.2 Internal Sensor Review

Sensing technology necessary to accommodate the acquisition of data referenced in literature reviews has been assessed. In general, sensing technology may be considered to be internal or external (relative to the vehicle).

It is commonly agreed that off-road glances increase the likelihood of crashes. Wierwille and Tijerina (1998) summarized three experiments and obtained results on eye glances that were targeted at various in-vehicle areas. They also examined the 1989 crash data from North Carolina and determined the number of crashes attributable to eye glances at the respective in-vehicle areas. Zhang and Smith (2004) referenced the correlation between multiple types of eyes-off-road exposures and the number of crashes.

Although the connection between visual distraction and automobile crash is commonly acknowledged, its determination is not possible in advance before the occurrence of crashes. Alternatively, driving performance measures such as lane keeping, speed maintenance, car following performance, driver reactions to objects and events are widely used safety measures. The strong connection between visual glance and SDLP was demonstrated by Zwahlen and DeBald (1986), Popp and Farber (1991) and Tijerina, Kiger, Rockwell, and Tornow (1996). Popp and Farber (1991) found that the SDLP increased when the mean glance duration and the number of glances to an in-vehicle display increased. Tijerina et al.'s (1996) "Heavy Vehicle Driver Workload Assessment" study demonstrated that as the line of text increased from 1 to 2 or 4, both the number of glances to the display and SDLP increased. Zwahlen and DeBald (1986) investigated the lateral lane keeping performance as a function of time (or travel distance) that the eyes were closed or looked away from the forward road. They found that when subjects closed their eyes or looked away, SDLP was higher than the baseline condition beyond 1 s of the drive.

10.2.1 EYE TRACKING SYSTEMS (ETS)

There are a variety of techniques and technologies available for extracting head and eye position and pose information from a driver. These techniques and technologies vary considerably in terms of precision, resolution, accuracy, invasiveness, required interaction, and cost. As such, it is important to the targeted application and use of the technology. A set of system requirements outlining which metrics are critical must be established before considering which technology can provide the necessary performance.

The previous studies have consistently demonstrated that visual distraction slows down brake reaction times to braking lead vehicles. Hancock, Simmons, Hashemi, Howarth, and Ranney (1999) instructed subjects to stop at intersections when the traffic light was changed to red from green. They revealed that when subjects were distracted with a simulated cell phone task (with visual and cognitive components), brake reaction time was slower (at 0.93 s) than was for the non-distracted condition (at 0.61 s). Lee, McGehee, Brown, and Reyes (2002) studied the reaction time impact of driver distraction in the context of forward collision warnings. In the distraction condition, subjects were asked to press a button near the

rearview mirror and report the number of times the digit 4 appeared on a display above the mirror. In another condition, subjects were not distracted. In either condition, the lead vehicle could brake quickly and imminently, which would require the driver to make an immediate response in order to avoid a crash. The accelerator-release reaction time was 0.4 s longer when subjects were distracted than when they were not distracted. The accelerator-to-brake transition time did not vary with distraction.

10.2.1.1 Eye Tracking System Requirements

As mentioned above many boundaries exist when considering technologies for automotive environments. During the course of the ETS industry/technology review certain weighting was given to systems more or less compatible in this environment. Although features such as automatic initialization, non-contact interaction, low cost, and system complexity are important for a production solution, technologies not compatible in these areas were still considered. The intent of the task is to 1) identify technologies useful for support tasks 1 through findings and 2) balance these requirements with the needs of an automotive solution.

Literature reviews indicate a need for eye gaze direction information. (Zhang and Smith, 2004) Eye gaze direction is useful in the determination of visual distraction. Eye gaze information can also be merged with exterior target or interior region information to ascertain an area of driver focus. Systems from such suppliers as Seeing Machines, Inc, SmartEye, and Sensormotoric can provide an accuracy of +/- 12 degrees which sufficient for making these driver distraction calculations. Eye gaze information is used to calculate the direction of the driver's eye gaze and or area of focus.

Additional information calculated by the eye tracking system is head pose and position. Head pose is useful for validation and verification of eye gaze measurements. The driver's head pose and position can also be extracted from most eye tracking systems. The head pose and position information is used during periods of eye occlusion or loss of tracking and, during these temporary periods, can provide an estimate of head pose.

By definition, resolution is the smallest measurable unit a system is capable of and accuracy is the difference between the actual and measured values.(Applied Science Laboratories, 2004) Values shown in the table below are minimum targets required to satisfy the literature review results and requirements. Requirements for a production, automotive solution may be more or less stringent, depending on the desired application.

Target	Metric
Horizontal Resolution of Gaze Point	**5°**

Horizontal Accuracy of Gaze Point	**+/- 5°**
Vertical Resolution of Gaze Point	**5°**
Vertical Accuracy of Gaze Point	**+/- 5°**
Horizontal Resolution of Head Position	**10 mm**
Horizontal Accuracy of Head Position	**+/- 10 mm**
Vertical Resolution of Head Position	**10 mm**
Vertical Accuracy of Head Position	**+/- 10 mm**

Table 1 – ETS System Requirements

The first step necessary when considering available ETS technologies (Smart Eye, Inc. 2004) is to specify requirements for an automotive solution as shown in Table 1.

It is necessary that the driver be free to rotate his/her head in any direction while driving.

A reasonable set of head rotation and translation allowances is outlined in Table 2.

Target	Metric
Allowable Horizontal Head Rotation	**+/- 90°**
Allowable Vertical Head Rotation	**+/- 45°**
Allowable Horizontal (x-axis) Head Translation	**+/- 150 mm**
Allowable Vertical (y-axis) Head Translation	**+/- 150 mm**
Allowable Depth (z-axis) Head Translation	**+/- 150 mm**

Table 2 – Allowable Head Rotation & Translation Requirements for ETS

The foundation for defining these requirements is a balance between nominal driver position, pose, and movement inside the vehicle along with widely accepted performance ranges of eye tracking systems. (Zhang and Smith, 2004)

10.2.1.2 Eye Tracking System Techniques

In general, if a technology or system possesses characteristics found to be prohibitive in automotive environment, consideration is given to whether the limitation is temporary or permanent in nature. (Eyeputer, 2004) For example, many, if not all, systems have a minimum setup or calibration period. The range and depth of user intervention varies greatly. If a path for a viable solution to this limitation is reasonable, then consideration is still given to the technology.

Technology costs indicated in Table 3 reflect estimates for individual system purchases and should be treated as a relative reference. It is assumed and expected that costs for an automotive product would be considerably less expensive.

The use of any type of headrest, head mount, or chin rest was determined to be too restrictive in an automotive environment. (ISCAN, 2004) Typically, these systems provide accuracy or resolution advantages but at the expense of ease of use and driver head movement.

Although many of the candidate technologies are capable of fulfilling the resolution and fidelity requirements of the desired eye behaviour information, there are limitations and boundaries (Eye Tracking System Requirements in this document) that render some technologies not feasible for an automotive application.

Technique:	Limbus tracking	Pupil tracking	Electro-oculography	Search coil	Mono Vision	Stereo Vision	Video Oculography
Subject contact	headmount	chin rest	electrodes	electrodes (contact lens)	none	none	mask or helmet
Eye gaze accuracy	1° - 7°	0.3°	±1.5 - 2°	0.08°	±6.0	±3.0	0.1°
Eye gaze resolution	0.1°	0.5°	good	0.2°	3.0°	1.5°	0.02° - 0.1°
Allowable head movement	H = ±15 - 30° V = ±15 - 20°	H = ±15 - 30° V = ±15 - 20°	H = ±30 V = ±30	H = ±25 V = ±25	H = ±25 V = ±26	H = ±25 V = ±27	H = ±30 - 45° V = ±30 - 45°
Sampling speed	200-4000Hz	50-250Hz	60Hz	1000Hz	30 Hz	30 Hz	60Hz
Real-time-response	<5ms delay	6-12ms delay	yes	<1ms delay	1 frame	1 frame	1 frame
Head pose measurements	no	no	no	no	fair	yes	X/Y/Z
Depht measurement	no	no	no	no	yes	yes	no
Pupil diameter measurement	no	yes	no	no	fair	fair	yes
Subject variety	low	reasonable	reasonable	none	good	good	reasonable
Daytime / nighttime use	good	good	good	good	good	good	poor
Glasses / sunglasses compatibility	fair	fair	good	poor	fair	fair	poor
Relative pricing	$	$$	$	$	$$	$$$	$$$

Table 3 – Eye tracking acquisition and measurement techniques

Metrics	IR Physiological Properties		
	Corneal/Pupil Relationship	Dual Purkinje	Feature-Based Approach (templates, corners, lines)
Blink capture	good	good	good (**)
Eyelid closure measurement	good (*)	good (*)	good (**)
Accuracy of eye gaze estimation	glint based approach - good (*)	good	excellent in stereo vision
Pupil diameter measurement	influenced by ambient	light dependent	good (**)
Invariance to scale changes (depth)	yes	yes	yes
Artificial illumination	required	required	no
Subject variety	repeatable	repeatable	good (*)
Subject calibration	required for eye gaze	required for eye gaze	difficult to cover all subjects
Special hardware setup	yes	yes	no
Computational expense	low	low	very high
Robustness to 2D head rotation	yes	yes	yes
Robustness to 3D Head rotation	pupil must be visible	pupil must be visible	yes with stereo
Daytime use	fair	fair	good (*)
Nighttime use	very good	very good	good with IR
Sunglasses compatibility	possible	possible	possible
Eyeglasses compatibility	varies with lens type	varies with lens type	marginal depending on glasses type

Table 4 – Eye Tracking Methods Comparison

Pupil tracking and Dual Purkinje techniques (Crane and Steele, Generation V Dual Purkinje Image Eye Tracker, 1985) offer the potential for measurement of the driver's pupil diameter. Literature reviews showed no requirements for this metric for use in the driver distraction calculation. Other concerns when employing these techniques are the critical orientation and placement of the illuminators. Component placement is critical for removal or elimination of unwanted artifacts and to the overall system performance. Integration flexibility for automotive interiors tends to be somewhat limited thus, rendering these technologies less desirable.

Several technologies have traditionally been very useful in research and medical fields where highly accurate and reliable eye gaze or head information is required. (Fourward Inc. 2004) Again, these techniques typically employ some type of driver/subject stabilization or contact apparatus.

Stereo video eye gaze measurement technique allows excellent access and visibility to the drivers face without the requirement of any type of contact apparatus. Visual distraction literature reviews indicate gaze accuracy and resolution requirements for an eye tracking system can be met with stereo video. High fidelity systems offer a level of detail not available with stereo video, but usually at an economic and integration trade-off. The use of consumer-grade, off-the-shelf components is another desirable aspect regarding stereo video eye tracking systems.

10.3. Exterior Sensor Review

The use of external sensing is useful in a variety of automotive applications. When considering the literature review requirements relative to the available sensing techniques and technologies, three technologies stood out. RADAR, LIDAR, and vision-based sensing technologies are viable options. Each has its own set of advantages and disadvantages relative to each other. The objective in this task is to match these benefits to the literature review requirements.

The Driving Task Demand dimension, described by Smith and Zhang (2004), requires information relating to the presence of a lead vehicle, vehicles in blind spots, as well as kinematics information for the host and target vehicles. Other diagnostics and measure used to determine algorithm thresholds, etc., are SDLP, lane exceedence, TLC, TTC, and heading.

An important consideration to make when evaluating external sensing technologies is the sensor performance relative to specific vehicle system applications such as Adaptive Cruise Control (ACC), ACC stop & go, Collision Warning, etc. Along with the performance tradeoffs, the issues of cost and package size need to be considered.

Relatively speaking, external sensing for automotive applications is more developed and more mature than internal (driver) sensing. (Riley et al, 2000) RADAR & Lidar technologies have been utilized in the military, private, and academic sectors for many years and the benefits clearly understood.

Fundamentally, external sensing systems must provide range/distance, range-rate/relative-velocity, azimuth, and elevation information relative to host and target vehicles. (NHTSA, 2000. *Automotive Collision Avoidance System Field Operational Test Program.* First Annual Report.) A reasonably wide 15-degree field of view is needed to accommodate the roadway curves and alignment tolerances as shown in Figure 1.

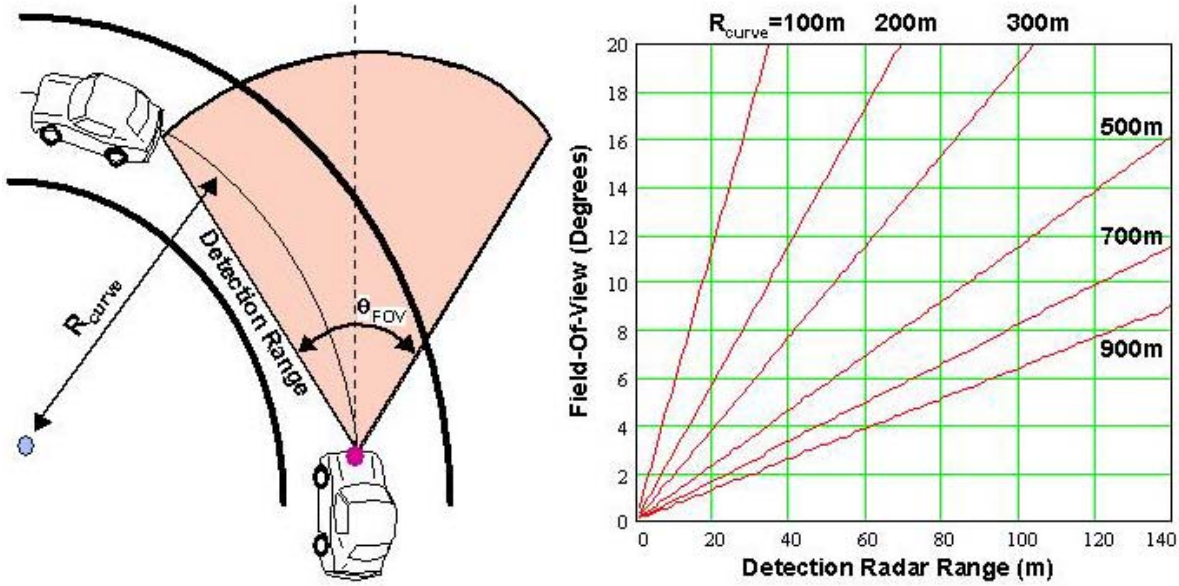

Delphi Electronics & Safety 2002

Figure 1 – External sensing field of view, azimuth, and range requirements.

External sensing systems must also provide excellent target detection capabilities. There is a need to discriminate between closely spaced vehicles, motorcycles and small cars, small cars at a distance, and be able to respond quickly to rapid vehicle cut-in and cut-out situations. The sensor must also identify, track, and reject roadside stopped objects. These multiple track files must have a high update rate. (e.g., 10Hz.)

Figure 2 is a graphical representation of driving situations that are critical in determining sensor suitability. Collision warning algorithms, for example, must make safety critical decision based on the presence or absence of objects in the host vehicle path.

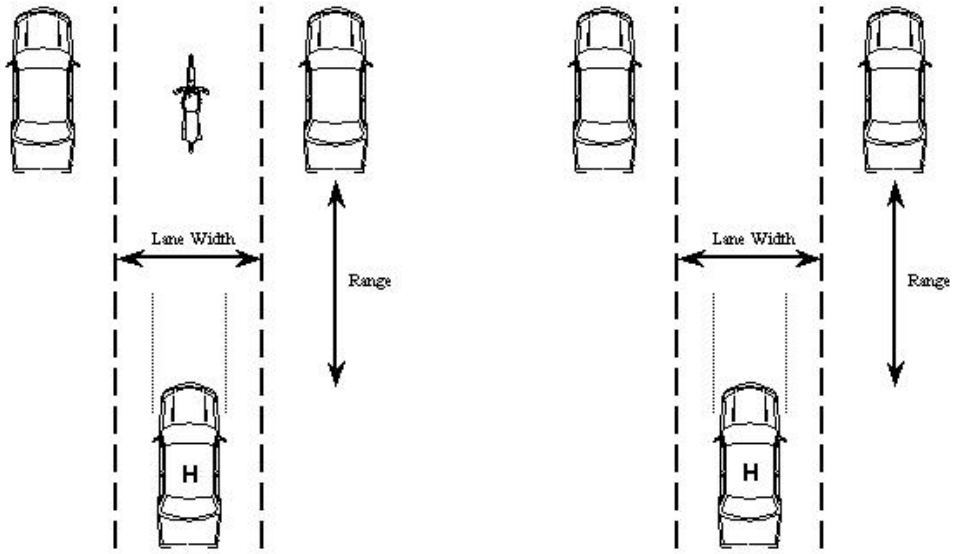

Delphi Electronics & Safety 2002

Figure 2 - Sensor requirements to resolve targets.

Additionally, the azimuth measure is critical in mid & long-range target situations. The sensor must have the ability to reliably resolve targets in adjacent-lanes at long-range. (NHTSA, 2000) Dense traffic requires closely spaced narrow beams for resolution and curved roads requires many narrow beams for wide field-of-view.

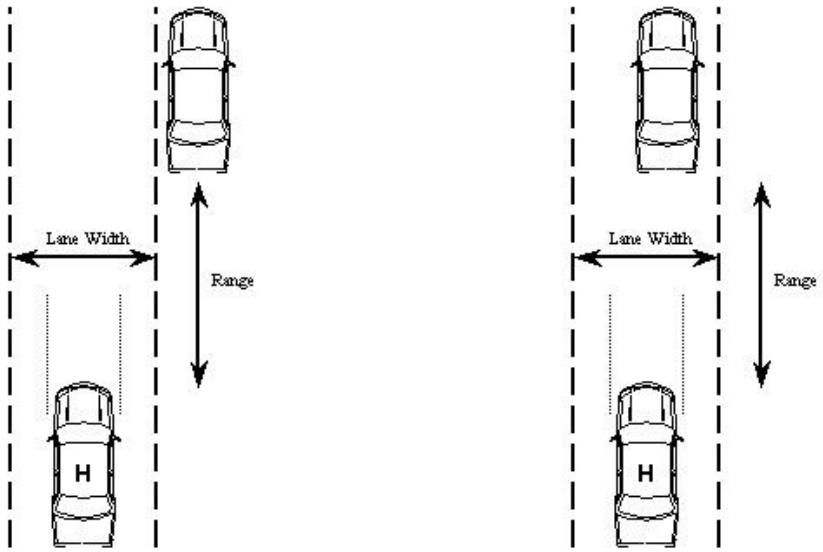

Delphi Electronics & Safety 2002

Figure 3 – Sensor requirements to determine target angle.

10.3.1 RADAR TYPES

There are a variety of RADAR technologies and techniques available for consideration in an automotive application. (Widmann, et al, 2000) Considering the Driving Task Demand and Performance requirements gathered during literature review, five types of RADAR technologies were reviewed: Frequency Modulated Continuous Wave (FMCW), Switched Beam Pulse Doppler, Switched Beam FMCW, Simultaneous Beam FMCW, and Monopulse-FSK. (E2V Technologies, 2004)

RADAR is a lightweight, complete design that can be provided in a single package/module. (Carsense, 2004) Through use of a mechanical scanning approach, the antenna is very lightweight. This design provides for a wide field-of-view necessary for azimuth, elevation, range, and range rate measurements. With this superior object detection capability detection of a wide variety of vehicles (motorcycles, passenger cars, trucks, etc.) is possible. Multiple object detections per beam is another feature with the mechanically scanned RADAR.

A brief highlight of the most common RADAR types available is provided below.

10.3.1.1 Scanned FMCW

- Scans Narrow Beam Over Wide FOV.
- FMCW down converts wide RF bandwidth to narrow video bandwidth.
- Multiple FMCW slopes used to measure range and range rate.
- Beam position with amplitude interpolation used to measure angle.
- Best angle discrimination, good range and range rate discrimination.

10.3.1.2 Switched Beam Pulse Doppler

- Three sequential beams to cover limited FOV.
- Steps through (wide) range gates sequentially to reduce processing bandwidth.
- Range rate with amplitude interpolation used to measure range.
- Doppler frequency shift used to measure range rate.
- Sequential lobing (amplitude comparison) used to measure angle.
- Coarse angle, range and range rate discrimination.

10.3.1.3 Switched Beam FMCW

- Three sequential beams to cover limited FOV.
- FMCW down converts wide RF bandwidth to narrow video bandwidth.
- Multiple FMCW slopes used to measure range and range rate.
- Sequential lobing (amplitude comparison) used to measure angle.
- Coarse angle discrimination, good range and range rate discrimination.
- Range rate discrimination better than scanned FMCW.

10.3.1.4 Simultaneous Beam FMCW

- Similar to switched beam FMCW except:
    - Three simultaneous beams cover limited FOV.
    - Long dwell times provide fine range rate discrimination.

10.3.1.5 Monopulse-FSK

- Single, wide transmit beam to cover wide FOV.
- Two narrowband dwells at different RF frequencies used to measure range.
- Doppler frequency shift used to measure range rate.
- Dual sum & difference antenna-receive channels used to measure angle.
- Long dwell times provide fine range rate discrimination.
- No discrimination in range or range rate.

10.3.2 RADAR TYPES COMPARISON

The five RADAR technologies described above are compared using five important metrics gleaned from SAVE-IT literature reviews. (Breuer and Weilkes, 1999) The compared metrics were: Stationary Object Detection, Moving Object Detection, Installation/Service, and Mounting Flexibility. These metrics were compared to the requirements as outlined above.

10.3.2.1 Stationary Object Detection

- Scanned FMCW – Very good.
    - Best overall multi-target discrimination. Some distributed object velocity confusion possible due to FMCW waveform.
- Switched beam pulse Doppler – Fair.
    - Cannot discriminate multiple (adjacent lane) stopped objects at about the same range except at short range. Not subject to distributed object velocity confusion.
- Switched or simultaneous beam FMCW – Fair.

    - Cannot discriminate multiple (adjacent lane) stopped objects at about the same range except at short range. Longer dwell times possible, allowing good range rate discrimination but not relevant for stationary objects. Some distributed object confusion possible due to FMCW waveform.
- Monopulse-FSK – Poor.
    - Host must be moving, cannot discriminate multiple stationary objects regardless of range or angle. Limited detection range for small stopped objects (e.g., stopped motorcycle).

10.3.2.2 Moving Object Detection

- Scanned FMCW – Very good.
    - Best overall multi-target discrimination. Relies on narrow beam width to ensure discrimination below R_d.
- Switched beam pulse Doppler – Fair.
    - Relies primarily on (relatively coarse) range and range rate discrimination. Coarse angle discrimination only effective at short range. Cannot discrimination targets at about the same range and velocity unless range is less than approximately 35 m.
- Switched or simultaneous beam FMCW – Fair.
    - Relies primarily on range and range rate discrimination. Coarse angle discrimination only effective at short range. Cannot discriminate multiple objects at similar range and velocity unless range is less than approximately 35 m. Enhanced range rate discrimination helps to mitigate coarse angle discrimination (better for simultaneous beam FMCW).
- Monopulse FSK – Fair.
    - Relies totally on fine range rate discrimination. Cannot discriminate multiple objects at the “same” range rate (regardless of range or angle). Fine range rate discrimination usually adequate for FCW even in dense traffic but can at times lose in-path target even at close range leading to inappropriate ACC acceleration.

10.3.2.3 Installation/Service

- Scanned FMCW – Very good.
    - Wide field of view allows electronic adjustment of sensor misalignment. Electronic angle adjustment allows automatic correction of alignment over life of vehicle. Also allows rapid re-alignment after dealer service without special test rig (short drive aligns sensor).
- Switched beam pulse Doppler - Poor.

    - Narrow Field of view allows no electronic adjustment without compromising basic cut-in and long range curve performance. Precise mechanical alignment required at factory and dealership.
- Switched or simultaneous beam FMCW – Poor.
    - Field of view allows no electronic adjustment without compromising basic cut-in and long range curve performance. Precise mechanical alignment required at factory and dealership.
- Monopulse FSK – Fair.
    - Wide field of view possible, but poor detection of stopped objects limits auto-alignment capability.

10.3.2.4 Mounting Flexibility

- Scanned FMCW – Very good.
    - Wide field of view allows large offset without compromising either cut-in or long-range curve performance.
- Switched beam pulse Doppler – Poor.
    - Narrow Field of view allows no offset without compromising basic cut-in performance.
- Switched or simultaneous beam FMCW - Poor.
    - Narrow Field of view allows no offset without compromising basic cut-in performance.
- Monopulse FSK – Good.
    - Possible wide field of view allows large offset without compromising cut-in or long-range curve performance. However, wide field of view reduces angular discrimination performance by increasing likelihood of same speed targets in FOV.

10.3.2.5 Material Cost

- Scanned FMCW – Fair.
    - Scan motor adds cost.
- Switched beam pulse Doppler – Fair.
    - High bandwidth Pulse Doppler processing adds cost.
- Switched or simultaneous beam FMCW – Fair.
    - Multi-channel MMIC adds cost (for simultaneous beam architecture).
- Monopulse FSK – Good.
    - Lowest cost architecture.

10.3.3 LIDAR TYPES

Light Detection and Ranging (LIDAR) uses the same principle as RADAR. The lidar instrument transmits light out to a target. (Schollinski, 2004) The transmitted light interacts with and is changed by the target. Some of this light is reflected / scattered back to the instrument where it is analyzed. The change in the properties of the light enables some property of the target to be determined. The time for the light to travel out to the target and back to the lidar is used to determine the range to the target.

10.3.3.1 Range finders

Range finder lidars are the simplest lidars. They are used to measure the distance from the lidar instrument to a solid or hard target.

10.3.3.2 DIAL

Differential Absorption Lidar (DIAL) is used to measure chemical concentrations (such as ozone, water vapor, and pollutants) in the atmosphere. A DIAL lidar uses two different laser wavelengths that are selected so that one of the wavelengths is absorbed by the molecule of interest while the other wavelength is not. The difference in intensity of the two return signals can be used to determine the concentration of the material being investigated.

10.3.3.3 Doppler

Doppler lidar is used to measure the velocity of a target. When the light transmitted from the lidar hits a target moving towards or away from the lidar, the wavelength of the light reflected/scattered off the target will be changed slightly. This is known as a Doppler shift - hence Doppler Lidar. If the target is moving away from the lidar, the return light will have a longer wavelength (sometimes referred to as a red shift), if moving towards the lidar the return light will be at a shorter wavelength (blue shifted). The target can be either a hard target or an atmospheric target - the atmosphere contains many microscopic dust and aerosol particles that are carried by the wind.

10.3.4 LIDAR CHARACTERISTICS

- Lightweight complete design provided in a single package/module
    - Lidar, lidar processor, and engine/brake control integrated into one package

- Ability to be integrated into the headlamp/headliner region

- Electronic switched beam scanning approach
  - No moving parts

- Wide field-of-view
  - Superior object detection capability
  - Detect vehicles without retro-reflectors and/or dirty, low reflective objects (guard rails, poles), signs

- Adverse weather recognition/detection/assessment/rejection
  - ·Recognize presence of weather elements (e.g.: fog, rain, etc.)

- Possesses many attractive radar performance features
  - Multiple object detections per beam
  - Adverse weather insensitivity/rejection (e.g.: detect objects in fog and rain)
  - Operation in adverse weather conditions

- Sophisticated multi-target tracking
  - Tracks all targets within detection zone

- Sophisticated lane assignment classification
  - Identify both in-lane and adjacent-lane targets

- Improved Angle Discrimination and Path Prediction
  - Modular design allows beam width changes for higher resolution applications

- Automatic electronic detection and compensation of sensor mechanical misalignments
  - Automatic electronic in-factory alignment
    - Electronic alignment in vehicle assembly plant (with fresnel lens)
    - System automatically performs azimuth alignment
    - Mechanical alignment not required
  - Automatic electronic on-road alignment
    - System automatically detects and compensates for misalignment during vehicle operation or after service at dealerships

- Automatic Blockage Detection
  - Detects if lidar surface is blocked (e.g.: slush, mud)

- “Track-to-Stop”
  - Continue reporting moving vehicle which has slowed to a stop

10.3.4.1 RADAR/LIDAR Kinematics Comparison

- Radar sensor

- Direct measurement of both range and range-rate parameters simultaneously
    - Doppler range-rate information aids in multi-target tracking approach
    - Provide detection-to-track correlation and ability to discriminate stopped objects

- Lidar sensor
    - Direct measurement of range parameter <u>only</u>
    - Requires modified multi-target tracking approach
    - Absence of measured velocity (or the resultant delay in deriving velocity) has a cascading/varied effect throughout the multi-target tracking procedure system

10.3.4.2 RADAR/LIDAR Conclusion

Essentially, both RADAR and LIDAR have the necessary performance for acquiring and discerning external targets in an automotive application. (Widmann, 2000) There are no major advantages for either in areas of cost, technology direction, performance in weather, or integration. (Schollinski, 2004)

10.3.5 VISION

The technology used in vision sensors for automotive interior applications is similar to that used in external applications. Generally, there are two feasible technologies available for vision applications for use in automobiles, Charge-Coupled Device (CCD) and Complimentary Metal Oxide Semiconductor (CMOS). Both devices are pixilated metal oxide semiconductors that accumulate charge (photons) in each pixel proportional to the illumination level, serving a spatial sampling function. (Fossum, 1997) The primary difference between the technologies is precision needed for the application and the ability of the application to absorb additional cost.

10.3.5.1 CCD and CMOS Comparison

10.3.5.1.1 Dynamic Range

The ratio of a pixel's saturation level to its signal threshold is the best way to quantitatively describe dynamic range. CCD imagers typically have improved dynamic range over CMOS imagers because CCD's use off-imager electronics to move data. CCD's use a "bucket-brigade technique to move electrons across the imager. The conversion for electrons to volts is the last conversion that takes place on the imager itself. The analog to digital conversion, amplifiers, and line drivers are located away from the imager, thus minimizing the amount of on-chip noise.
CMOS imagers make up some of these dynamic range gaps by taking advantage of better optics or specialized software and algorithm techniques.

10.3.5.1.2 Uniformity

Uniformity can be described as the response consistency for different pixels under the same external conditions. Ideally, there would be no variation from pixel to pixel, but less than perfect process control, defects, and beta characteristics in amplifiers create non-uniformity in imagers. Originally, CMOS lagged severely in this area, but improvements in amplifier circuits and circuit geometries narrowed the gap during bright conditions. Of concern is the amount of current generated when there is no light.

10.3.5.1.3 Resolution

Since CCDs locate the majority of the circuitry off the imager chip, pixel resolutions can be quite high. CMOS imagers used standard cmos memory manufacturing lines to achieve minimum pixel geometries. At one time, there was a considerable CCD advantage, but improvements to equipment, process, and design have made resolution differences less critical.

10.3.5.1.4 Fill Factor

Fill factor is typically expressed as a percentage representing the ratio of photon sensitive material to photon non-sensitive material. The higher the fill factor, the greater the percentage of photosensitive area. No doubt CCDs excel in the area. There are no devices, circuits, or amplifiers located in the pixel to decrease fill factor. CMOS imagers tend to have lower fill factors as resolutions increase because processing rules decrease geometry size while maintaining overall imager format size.

10.3.5.1.5 Dark Current

Dark current represents a portion of the image signal that is not a direct result of photon stimulation. As a result, higher dark current values decrease the signal to noise ratio and overall image contrast and quality. CMOS imagers use reference pixels and voltages to make this category even.

10.3.5.1.6 Noise

There are a variety of noise sources for both CCD and CMOS imagers. Each noise source can be sufficiently mitigated with proven techniques and approaches. Reset and flicker (1/f) noise are attenuated by using techniques similar to common mode rejection, correlated sampling. Dark current shot noise is typically mitigated through temperature and/or process control. Photon shot noise is drastically reduced when more light, ambient or artificial, is present.

10.3.5.2 Vision Applications

There is a variety of camera-based vision technology being developed for automotive use. Applications such as lane departure warning (LDW), blind spot warning, lane change assist, precrash warning, and pedestrian detection are just a few.

In the SAVE-IT vehicle a single camera lane departure warning system will be used to provide lane position information. Literature reviews indicate a need for host vehicle lane position information while assessing driver performance. (Green, et al, 2004). Requirements of the SAVE-IT LDW system are to detect lane markings and store the lateral deviation, to the nearest tenth of a foot, at a rate of 10 Hz.

10.3.5.3 CCD and CMOS Summary

CCD imagers provide excellent performance in areas of resolution, speed, noise, and uniformity. The market and manufacturing capabilities are mature and established. Ideal applications for this technology tend to be camcorders, digital still cameras, science, astronomy, medicine, and factory automation. However, CCD imagers do require multiple power supply voltages, have high power consumption, can experience "blooming", have a "distributed architecture", and are not mainstream, flexible production lines.

By comparison, CMOS imagers require only a single, low voltage power supply, have very low power consumption, do not experience blooming or smearing, can utilize random access (region of interest), use existing computer memory production lines and processes, and provide a "camera on a chip". (Caspe, 2000) However, CMOS imagers don't compare with CCD imagers in areas of dark current levels, noise, and uniformity. Although both CCD and CMOS imagers have substantial advantages in specific areas, the overall market direction, cost, and automotive feasibility tends to favor CMOS imagers in the future. The prospect of high volume production and low cost are targets for every major CMOS imager supplier. Therefore, for exterior vision applications, CMOS imagers will be used.

10.4 Concept Vehicle Architecture

The SAVE-IT vehicle architecture consists of many subsystems and components. The major pieces of the architecture are described below. Several technologies installed proved to be either unusable for the desired application or weren't considered to be a primary area of concern, so they were not emphasized or demonstrated.

10.4.1 SYSTEM FUNCTIONAL DESCRIPTION

Human Machine Interface Processor (HMIP): The HMIP performs the function of Safety System Manager to monitors the vehicle, environmental and driver states and determine the appropriate response. The HMIP interfaces to various biophysical sensors, monitors non-driving related activities, and assesses the overall-driving situation. . With this unified observation, the HMIP can assess the overall situation and provide adaptive distraction mitigation and safety warning countermeasures commensurate with the needs of the driver.

- Heart Rate and Respiration Monitoring: For conceptual demonstration, the heart rate monitor uses the steering wheel to detect the drivers pulse. The steering wheel rim has two electrically conductive sensors that monitor the heart rate by using a steering wheel processor (SWP) then can calculate by means of differential pulse.

- The Respiration Monitor system, which uses a Short Range Biosigns Sensor (SRBS), is low-power RADAR that senses the position and movement of surfaces near the antennas. It operates at frequencies near 6.5GHz, with a short pulse modulation, about 1ns long, repeated at approximately 6MHz.
  The receiver converts these signals to an audio frequency output, in which each frequency component is reduced by a factor of approximately 1.5×10^6. The radar output signal consists of a repeated voltage pulse waveform at frequencies up to approximately 4.5kHz. The waveform is repeated at approximately 100Hz, and corresponds to signals observed at increasing values of delay, up to approximately 10ns.

  The system will be used for evaluation only and will not be included in the final architecture due to the difficulty in providing robust measures.

- Eye Tracking System (ETS): The Eye Tracking System (ETS) contains two CCD sensors and an image-processing unit. The hardware platform is a 2.4GHz P4 processor with a 20 GB HD running Windows XP. The unit is a Dell Precision desktop unit designed primarily for consumer electronics. The 120VAC power requirements are achieved through use of a DC inverter tied to a separate standalone battery system.
  The system monitors the driver's head position, eye blinks, and eye gaze and provides input to the HMI processor for determining appropriate driver workloads. This information is useful in the calculation of visual distraction and driver intent.

- Head Up Display (HUD): The HUD is used by the HMIP to display information to the driver. The HUD field of view of 3 degrees horizontal x 8 degrees vertical. The HUD receives display information from the HMIP via an LVDS interface. The graphics engine is a 400 MHz P3 embedded processor running in a Windows environment. The embedded PC has a PC104 video card that passes video images to the HUD via an LVDS interface. The display device in the HUD is a color, reconfigurable 300 x 150 pixel liquid crystal display. Addressing the display interface is achieved by using the standard 640 x 480 VGA display format. The hardware then extracts the 300 x 150 pixels in the upper-left corner of the VGA screen and maps them to the LCD. The color depth will be 8-bit, using a palette look-up table.

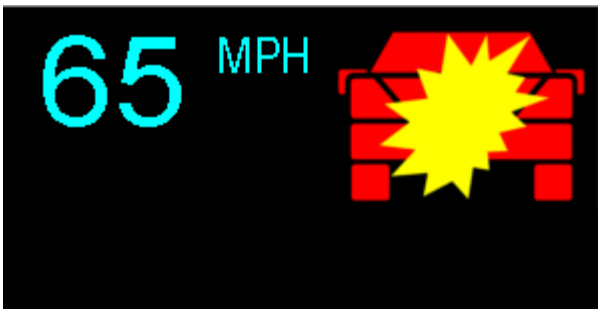

Figure 4 – Head Up Display Image

- MMM/IVIS: Mobile Multi-Media/In-vehicle Information System with navigation/GPS, radio, CD, and playback capabilities. Integrated into cockpit center console using a color reconfigurable AMLCD with an integrated capacitive touch screen interface. The system consists of an embedded PC (AW board) running the Navtech navigation engine, a VGA AMLCD with an integrated touchscreen, and a Motorola H60 embedded controller. The AW board has a DVD interface, a custom serial interface channel to the H60, and audio output to an external audio amplifier. The AW board draws graphics through a standard analog RGB interface to the Sharp LCD RGB analog input. Display faceplate buttons, knobs and touches are actually controlled by the H60 and communicated to the AW computer via the custom serial interface.

- Side View Mirrors: These are replacement mirrors that contain LED-backlit icon to warn the driver of the presence of an object in the blind spot or adjacent lane. The practical use of these icons will be conducted as an evaluation only activity.

- Forward Looking Radar (FLR) Sensor - 76 GHz Long Range RADAR using CAN communication. The Forward-Looking Radar (FLR) processes radar returns from ranges of up to 150 meters and produces target tracks. The FLR tracks up to 15 targets returning target range, range rate, centroid and extent. The FLR passes raw target information to a Motorola embedded controller, which calculates the nearest in-path target.

- Vision - (Lane Tracking): This subsystem will detect that the driver is wandering from the lane and send a CAN message to the HMIP to sound an alert. The lane tracking system consists of a camera mounted behind the mirror and a computer mounted in the trunk. The system uses the lane markers to determine the vehicle's position and angle in the lane, the road curvature and the lane departure information. This information is put on the CAN bus for processing by the FCW and HMI. The camera was connected to a frame buffer in an 80486-based computer. Custom computer software was written to detect lane markings and store the lateral deviation, to the nearest tenth of a foot, at a rate of 10 Hz.

- ICHMSL and RPA: LED displays combined into one unit mounted in the center, upper region of the rear window. The ICHMSL display is used in the traditional CHMSL manner while the RPA display will be located facing inward toward the driver. The HMIP will monitor side and rear areas and provide the appropriate signals to the ICHMSL/RPA. The ICHMSL is a bi-color (amber and red) display used to warn motorists during normal and hard braking situations. During normal braking, the center section of the display will illuminate red. During hard braking, the number of red display segments illuminated will increase. During backup/reverse maneuvers, the ICHMSL display will flash amber to warn pedestrians. During backup/reverse maneuvers, the RPA will flash a set of amber LEDs when an object is detected. As the vehicle moves closer to the object, the display will change flash frequency and color to red.

- Fwd Lane Assignment Processor: This processor accepts CAN messages from the forward long-range radar and the forward short-range sensors and determines forward targets in the path. The output of this process is sent to the ACC/CW controller for cruise/threat processing.

- CW Processor: This embedded processor receives information from the forward sensors via CAN and controls the Collision Warning functions. The controller has 16 I/O ports that can be configured as analog or digital ports. Warnings and icons are generated by the HMIP via messages on CAN. CAN messages are also sent to the brakes and throttle systems.

- Steering Wheel Controls: Used to provide audio and CW commands to MMM and HMIP. The standard serial communications from the OEM was modified to allow button reconfiguration applicable to the SAVE-IT functions. The serial messages were read via a standard PS2 serial port and re-mapped in the CW Processor. Button presses were interpreted and commands were sent to various receivers through the CAN bus.

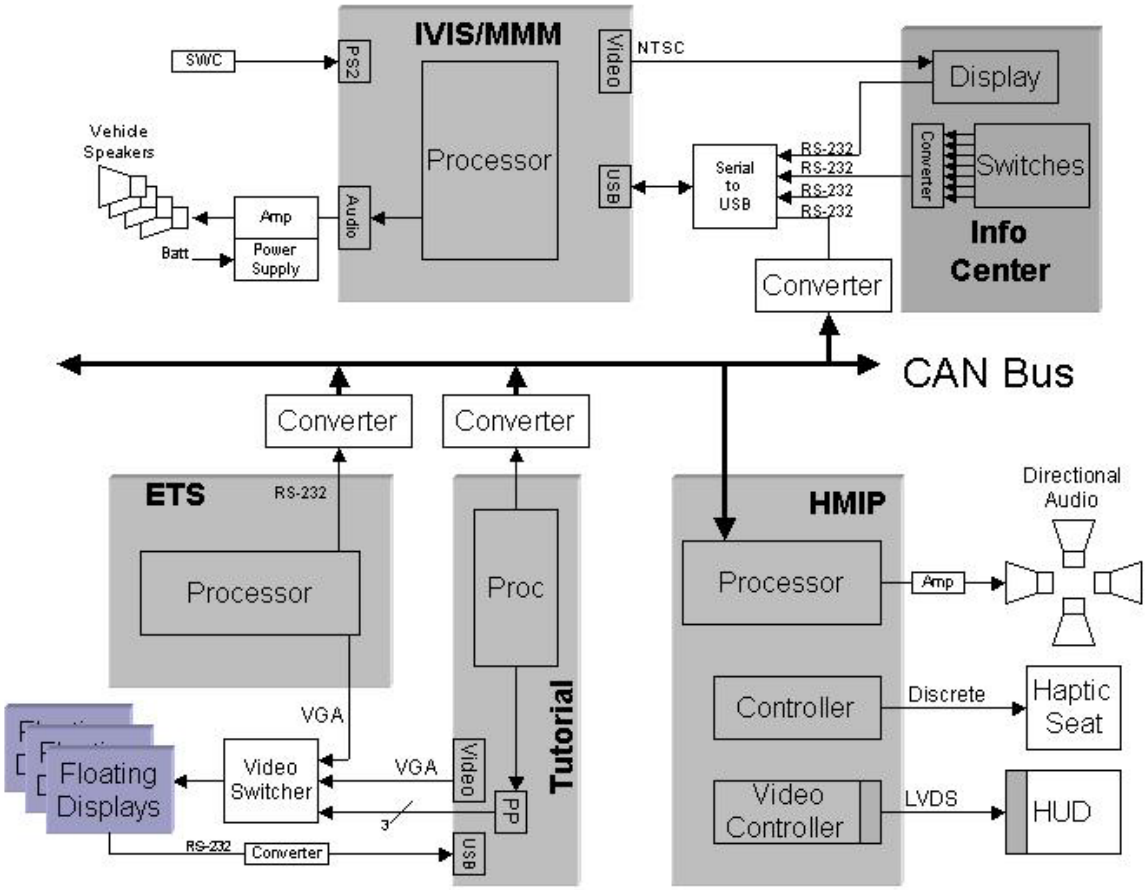

Figure 5 – SAVE-IT Concept Vehicle Architecture

The four major subsystems in the vehicle are the Human Machine Interface Processor (HMIP), Mobile Multi-Media/In-vehicle Information System (MMM/IVIS), Eye Tracking System (ETS), and the Tutorial. Figure 4 shows how each system interfaces with its own components, the vehicle, and the other major subsystems. A brief description of subsystem follows:

- HMIP

- Interface to high speed (500K) CAN bus.
- Controls the timing and audio content of the directional audio system
- Controls the discrete I/O for speaker on/off, HUD icons, haptic seat, and side view mirror icons.
- Generates graphics for HUD
- Figure 5 shows a sample page from the Engineering Interface Tool used to evaluate, tune, and test vehicle systems. This tool provides a graphical interface allowing the user access to CAN traffic, serial data, discrete I/O, RADAR data,

and vehicle information. Algorithms can be modified, tested, and compared to a baseline while monitoring the impact on other systems.

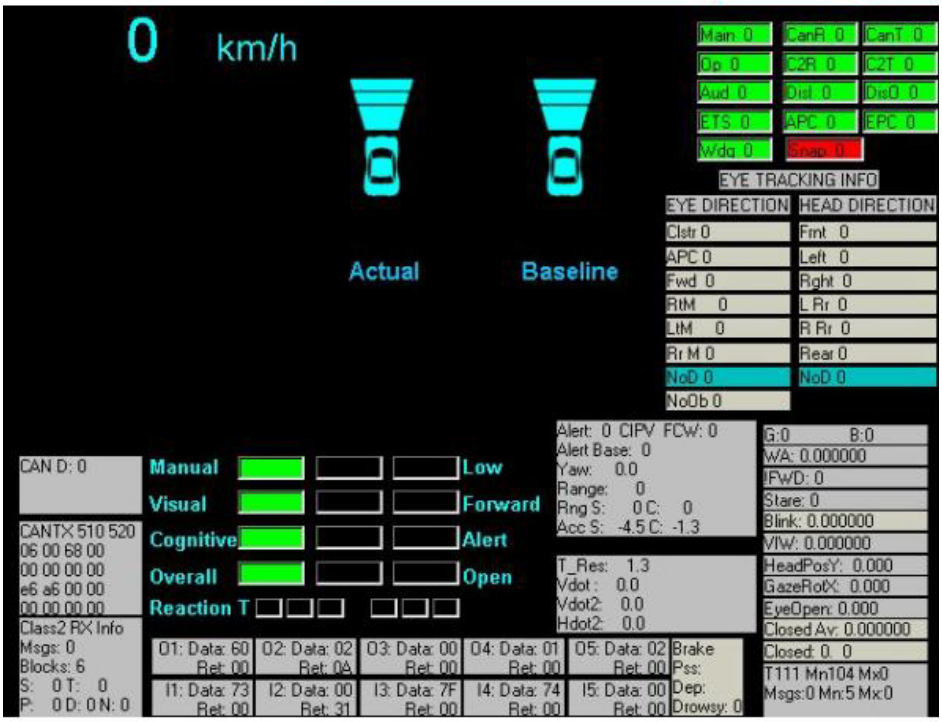

Figure 6 – SAVE-IT vehicle Engineering Test Tool

- MMM/IVIS:
  - Capacitive touch screen, interface, and 6.4” color, flat panel display.
  - READ CAN messages from Tutorial.
  - Provides Driving Task Demand HMI (e.g, Gray out, Call forwarded)
  - Provides text and/or icon warnings.
  - Displays Distractometer (driver distraction level indication).
  - Responds to driver gaze to show warning state if looking at the display.
  - Read discrete control devices, controls volume, mute, audio amplification, etc.
  - RS-232 based I/O interface.
  - Allows function control via steering wheel controls.

- Tutorial:
  - Used primarily for the graphical interface for HMI and/or technology interaction
  - Uses discrete control to provide video switching control for floating displays.
  - Serial communication with touch screen.
  - Communicates via high speed (500K) CAN bus.

- o Interactive PowerPoint template developed to interface with HMI video stored locally.
- o Plays MPEG videos for distraction mitigation, safety warning countermeasures, and eye tracking used in interactive HMI demonstration.

- ETS:
  - o Communicates via high speed (500K) CAN bus.
  - o Generates formatted video containing driver video with eye tracking graphics overlay.
  - o Runs eye tracking system gaze measurement application.
  - o Camera calibration tool

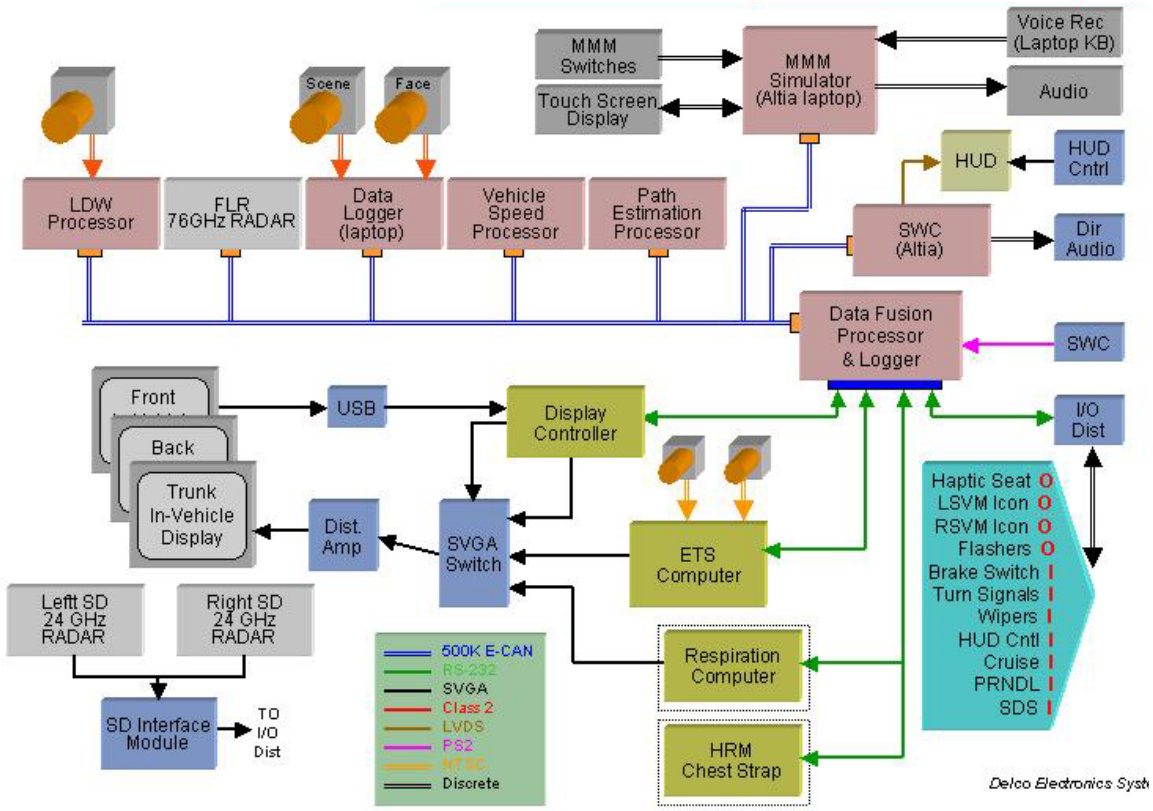

Figure 7 – SAVE-IT Concept Vehicle Architecture

The architecture shown in Figure 6 represents not only a means for demonstrating, testing, and proving concepts, but also a means for partitioning, scaling, and integrating functions and technologies. All of the demonstrated technologies, components, and systems represented were utilized to support the testing of SAVE-IT concepts.

10.5 Summary and Conclusion

In some cases, a particular technology was more suited to meeting the program objectives. The breadth and depth of functionality and integration may be excessive for a production environment, but ideal for a research application. For example, logging video and vehicle data is necessary for research but not in production. In these cases, a more efficient architecture would be utilized in production.

While not in its final form, the architecture is suited to accommodate changes and growth, dictated by SAVE-IT program requirements. The architecture is requirements-driven from literature review results. Although this report is not a literature review, rather a technology evaluation report, it does provide some background beyond technology requirements and specifications.

As stated in the Task 10 proposal, an evaluation of the technologies needed to support the findings from Tasks 1 through Task 9 was the objective. This report presents suggestions for preliminary guidelines and concepts that will allow the demonstration of said findings within the scope of cost, complexity, integration, and time limitations.

Moving forward, this concept vehicle will be used as a reference platform for the test vehicle slated for delivery at the end of Phase II. The tests vehicle will also incorporate any significant improvements or findings not available at the time of this writing.

Additionally, this same architecture will be used in simulator environments. In some cases, an exact duplication of the actual engineering vehicle is not possible in a simulator. As such, representative data and information will be generated to closely match real world conditions.

10.6 References

Applied Science Laboratories (2004) http://www.a-s-l.com

Breuer, Karsten & Weilkes, M. (1999). A Versatile Test-Vehicle for ACC-Systems and Components. *Euromotor, Aachen, February, 1999.*

Carsense (2004) http://carsense.orgNHTSA (2000). Automotive Collision Avoidance System Field Operational Test Program. First Annual Report.

Caspe, B., (2000). A Practical Guide to Sensor Selection. http://www.soundvisioninc.com

Crane, Hewitt D. & Steele, Carrol M. (1985). Applied Optics, Volume 24, Issue 4, 527- *Generation V Dual Purkinje Image Eye Tracker*

Eyeputer Inc. (2004) http://www.electronica.fr/eyeputer.htm

Folke, M., Cernerud, L., Ekstrom, M., & Hok, B.(2003) Critical Review of Non-invasive Respiratory Monitoring in Medical Care. *Medical Biology Computing, #41, (377-383)*E2V Technologies (2004) http://e2vtechnologies.com/datasheets/automotive/mms_u.pdf

Fossum, E., (1997). CMOS Image Sensors: Electronics Camera –On-A-Chip. *IEEE Transactions On Electron Devices, Vol. 44, No. 10. October 1997.*

Fourward Inc. (2004) http://www.fourward.com

Green, P. (2004). SAfety VEhicles using adaptive Interface Technology (Task 3): A literature review of Driving Performance for Dialing, Radio Tuning, and Destination Entry while Driving Straight Roads.

ISCAN Inc. (2004) http://www.iscaninc.com

Lee, J., (2004). SAfety VEhicles using adaptive Interface Technology (Task 5): A literature review of Cognitive Distraction research.

Riley, B., Kuo, G., Schwartz, B., & Zumberge, J. (2000) Development of a Controlled Braking Strategy For Vehicle Adaptive Cruise Control. *SAE 2000 World Congress, Detroit, Michigan, March, 2000*.

Popp, M. M., & Farber, B. (1991). Advanced display technologies, route guidance systems, and the position of displays in cars. In A. G. Gales, et al. (Editors). *Vision in Vehicles–III*, Elsevier Science Publishers B. V. (North Holland).

Schollinski, Hans-Lothar (2004). ADAS Overview, Systems and Market Introduction Issues. *Information Society Technologies, Cologne, Germany, April, 2004.*

Seeing Machines, Inc. (2004). http://www.seeingmachines.com.

Sensomotoric Inc. (2004). http://www.smi.de.

Smart Eye Inc. (2004) http://www.smarteye.se

Smith, M. & Zhang, H (2004). SAfety VEhicles using adaptive Interface Technology (Task 8): A literature review of Intent planning document.

Smith, M. & Zhang, H (2004). SAfety VEhicles using adaptive Interface Technology (Task 9): A literature review of Safety Warning Countermeasures planning document.

Tijerina, L., Kiger, S., Rockwell, T., & Tornow, C. (1996). *Heavy vehicle driver workload assessment Task 7A: In-cab test message system and cellular phone use by heavy vehicle drivers on the road.* DOT HS 808 467.

Widmann, Glenn R. (2000) Comparison of Lidar-Based and Radar-Based Adaptive Cruise Control Systems. *SAE 2000 World Congress, Detroit, Michigan*.

Wierwille, W. W., & Tijerina, L. (1998). Modeling the relationship between driver in-vehicle visual demands and accident occurrence. In A. G. Gales, et al. (Editors). *Vision in Vehicles–VI* (pp. 233-243), Elsevier Science Publishers B. V. (North Holland).

Zhang, H & Smith, M. (2004). SAfety VEhicles using adaptive Interface Technology (Task 7): A literature review of visual distraction research.

Zhang, H., & Smith, M. (2004). SAfety VEhicles using adaptive Interface Technology (Task 2): A literature review of Phase 2a planning document.

Zwahlen, H. T., & DeBald, D. P. (1986). Safety aspects of sophisticated in-vehicle information displays and controls (pp. 256-260). *Proceedings of the Human Factors Society – 30th Annual Meeting.* Santa Monica, CA.

10.7 Acronyms Glossary

ACAS	Automotive Collision Avoidance System
ACC	Adaptive Cruise Control
ACM	Adaptive CounterMeasures
AHS	Autonomous Highway System
AMLCD	Active Matrix Liquid Crystal Display
ANCOVA	Analysis Of COVAriance
ANOVA	Analysis Of VAriance
ASL	Applied Science Laboratories
BAA	Broad Agency Announcement
BRT	Brake Reaction Time
BSW	Blind Spot Warning
CAN	Controller Area Network
CCD	Charge Coupled Device
CD	Compact Disk
CMOS	Complimentary Metal Oxide Semiconductor
CW	Collision Warning
DDE	Delphi Delco Electronic Systems
DIAL	DIfferential Absorption Lidar
DSM	Driver State Monitor
DVD	Digital Versatile Disk
ETS	Eye Tracking System
FCW	Forward Collision Warning
FLR	Forward Looking Radar
FMCW	Frequency Modulated Continuous Wave
FOT	Field Operational Test
FSK	Frequency Shift Keying
GM	General Motors
GPS	Global Positioning System
HMI	Human Machine Interface
HMIP	HMI fusion Processor
HUD	Head-Up Display
Hz	Hertz
IESIM	Industrial Engineering Hyperion Simulator at the University of Iowa
I/O	Input/Output
ISS	Integrated Safety Systems
IVI	Intelligent Vehicles Initiative
IVIS	In Vehicle Infotainment System
LCD	Liquid Crystal Display
LDW	Lane Departure Warning
LED	Light Emitting Diode
LIDAR	LIght Detection And Ranging
LVDS	Low Voltage Differential Signal
MMM	Mobile Multii-Media
MPEG	Moving Pictures Expert Group
NADS	National Advanced Driving Simulator
NHTSA	National Highway Transportation Safety Administration
OEM	Original Equipment Manufacturer
PCS	Pre-Crash Sensing
RADAR	RAdio Detection And Ranging
RF	Radio Frequency
RGB	Red, Green, Blue
RPA	Rear Parking Aid

RT	Reaction Time
SAE	Society for Automotive Engineers
SAVE-IT	SAfety VEhicles using adaptive Interface Technologies
SDLP	Standard Deviation of Lane Position
SNR	Signal to Noise Ratio
SRBS	Short Range Biosigns Sensor
STA	Situational Threat Assessment
TLC	Time-to-Lane Crossing
TRC	Transportation Research Center
TTC	Time To Collision
UMTRI	University of Michigan Transportation Research Institute
VGA	Video Graphics Array
VIRTTEX	VIRtual Test Track EXperiment